UNIVERSITY OF CAMBRIDGE INTERNATIONAL EXAMINATIONS
General Certificate of Education
Advanced Subsidiary Level and Advanced Level

CANDIDATE NAME	
CENTRE NUMBER	
CANDIDATE NUMBER	

2252188686

PHYSICS **9702/32**

Paper 32 Advanced Practical Skills 2 **May/June 2008**

2 hours

Candidates answer on the Question Paper.

Additional Materials: As listed in the Confidential Instructions.

READ THESE INSTRUCTIONS FIRST

Write your Centre number, candidate number and name on all the work you hand in.
Write in dark blue or black pen.
You may use a soft pencil for any diagrams, graphs or rough working.
Do not use staples, paper clips, highlighters, glue or correction fluid.
DO **NOT** WRITE IN ANY BARCODES.

Answer **all** questions.
You will be allowed to work with the apparatus for a maximum of one hour for each question.
You are expected to record all your observations as soon as these observations are made, and to plan the presentation of the records so that it is not necessary to make a fair copy of them. The working of the answers is to be handed in.
Additional answer paper and graph paper should be submitted only if it becomes necessary to do so.
You are reminded of the need for good English and clear presentation in your answers.

At the end of the examination, fasten all your work securely together.
All questions in this paper carry equal marks.

For Examiner's Use	
1	
2	
Total	

This document consists of **8** printed pages and **4** blank pages.

© UCLES 2008

BLANK PAGE

You may not need to use all of the materials provided.

For Examiner's Use

1 In this experiment you will measure the period of oscillation of a wooden rod weighted at different positions. You will use the results to determine the mass of the rod.

(a) Set up the rod so that it is pivoted by a nail as shown in Fig. 1.1. Another nail should be placed through the bottom hole and a 0.100 kg mass is to be held in place with a small piece of Blu-Tack.

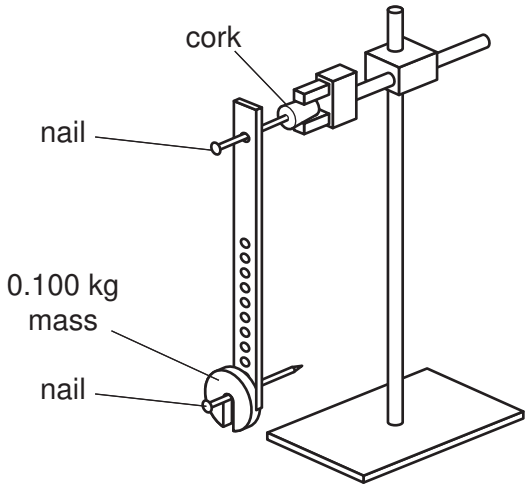

Fig. 1.1

(b) Measure the distance l between the two nails.

l = ... m

(c) Displace the rod so that it oscillates with a small amplitude in a vertical plane as shown in Fig. 1.2.

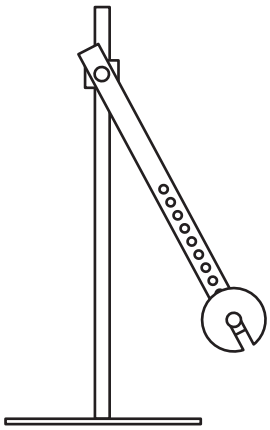

Fig. 1.2

Determine the period T of oscillation.

T = ... s

(d) Move the bottom nail and the mass to different holes and repeat **(b)** and **(c)** until you have six sets of readings for l and T. Include values for T^2 in your table of results.

For Examiner's Use

(e) Plot a graph of T^2 on the y-axis against l on the x-axis and draw the line of best fit.

(f) Determine the gradient and y-intercept of this line.

gradient = ...

y-intercept = ...

© UCLES 2008

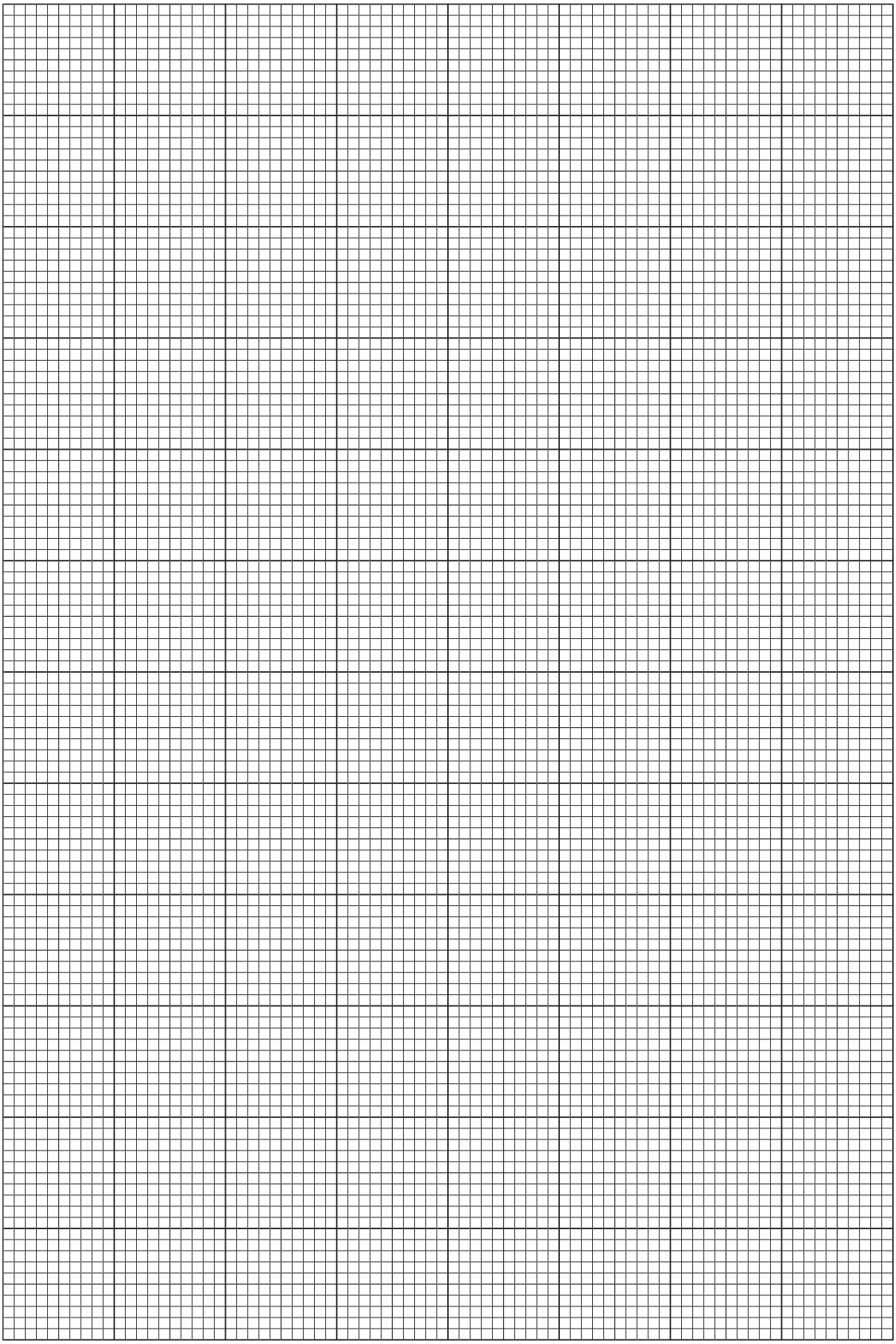

For Examiner's Use

(g) It is suggested that the relationship between T^2 and l is

$$T^2 = \frac{4\pi^2 ml}{g\,(m + M)} + z$$

where m is 0.100 kg, M is the mass of the rod, $g = 9.81\,\text{N kg}^{-1}$ and z is a constant for this experiment.

Use your answers from **(f)** to determine the values of M and z. Give appropriate units.

For Examiner's Use

M = ...

z = ...

© UCLES 2008

BLANK PAGE

Please turn over for Question 2

You may not need to use all of the materials provided.

For Examiner's Use

2 **(a)** Roll out the modelling clay into a cylinder of length 4 cm. Wrap the 4 cm width of paper around the cylinder's length and fix with Sellotape as shown in Fig. 2.1.

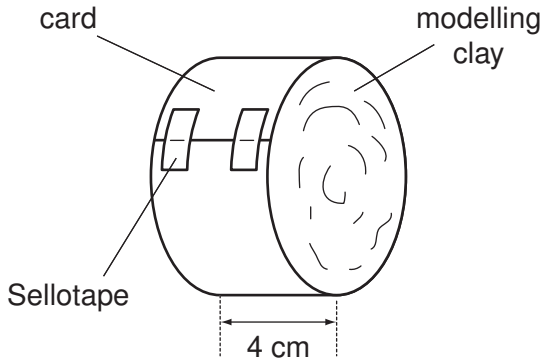

Fig. 2.1

(b) **(i)** Use the string to measure the circumference *c* of the cylinder.

c = ...

(ii) Estimate the percentage uncertainty in *c*.

% uncertainty in *c* = ...

(iii) Use your answer to **(i)** to determine the radius *r* of the cylinder.

r = ...

© UCLES 2008

(c) Place the cylinder at the top of the slope and release it so that it rolls down the slope. Measure the time t for the cylinder to travel a distance of 50 cm from rest.

For Examiner's Use

t = ... s

(d) Undo the paper and roll the modelling clay into a cylinder of length 8 cm. Wrap the 8 cm width of paper around the cylinder's length and fix with Sellotape. Repeat **(b)(i)**, **(b)(iii)** and **(c)**.

c = ...

r = ...

t = ...

(e) Explain whether your results support the idea that t^2 is proportional to r.

.....

.....

.....

.....

.....

(f) (i) State four sources of error or limitations of the procedure for this experiment.

For Examiner's Use

1. .....

.....

2. .....

.....

3. .....

.....

4. .....

.....

(ii) Suggest four improvements that could be made to the experiment. You may suggest the use of other apparatus or different procedures.

1. .....

.....

2. .....

.....

3. .....

.....

4. .....

.....

© UCLES 2008

BLANK PAGE

BLANK PAGE

Permission to reproduce items where third-party owned material protected by copyright is included has been sought and cleared where possible. Every reasonable effort has been made by the publisher (UCLES) to trace copyright holders, but if any items requiring clearance have unwittingly been included, the publisher will be pleased to make amends at the earliest possible opportunity.

University of Cambridge International Examinations is part of the Cambridge Assessment Group. Cambridge Assessment is the brand name of University of Cambridge Local Examinations Syndicate (UCLES), which is itself a department of the University of Cambridge.